Current part is item (10) on diagram. Available at www.oshkoshequipment.com

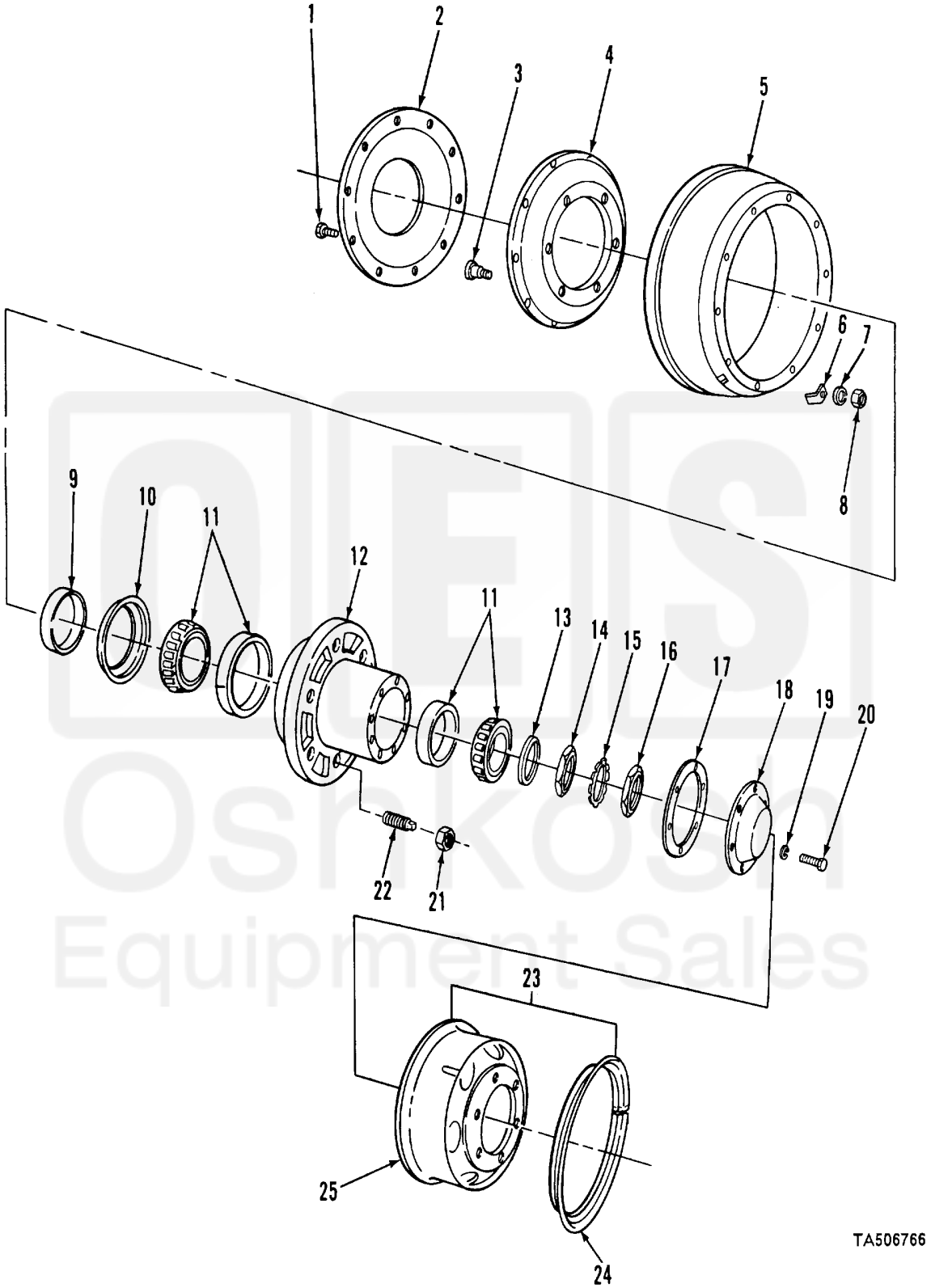

FIGURE 18. WHEEL AND HUB.

Current part is item (10) on diagram. Available at www.oshkoshequipment.com

Current part is item (10) on diagram. Available at www.oshkoshequipment.com

(1) ITEM NO	(2) SMR CODE	(3) CAGEC	(4) PART NUMBER	(5) DESCRIPTION AND USABLE ON CODES (UOC)	(6) QTY
				GROUP 13 WHEELS AND TRACKS	
				GROUP 1311 WHEEL ASSEMBLY	
				FIG 18 WHEEL AND HUB	
1	PAOZZ	19207	7409389	BOLT, RIBBED SHOULDE 7/16-20UNF X 1-	20
2	PAOZZ	19207	8343588	DEFLECTOR, DIRT AND LIQUID UOC:842	1
2	PAOZZ	19207	7409556	DEFLECTOR, DIRT AND LIQUID UOC:843	1
3	PAOZZ	96906	MS51946-1	BOLT, RIBBED SHOULDE LEFT UOC:842,844	10
3	PAOZZ	96906	MS51946-1	BOLT, RIBBED SHOULDE LEFT UOC:152,843	6
3	PAOZZ	96906	MS51S46-2	BOLT, RIBBED, SHOULDE RIGHT UOC:842,844	10
3	PAOZZ	96906	MS51946-2	80LT,RIBBED, SHOULDE RIGHT UOC:842,844	6
4	XDOZZ	19207	8710742	ADAPTER, DRUM UOC:152,844	1
4	PAOZZ	19207	8343587	ADAPTER UOC:842	1
4	XBOZZ	19207	7409380	ADAPTER, DRUM UOC:843	1
5	PAOZZ	19207	7409394	BRAKE, DRUM	2
6	PAOZZ	19207	7979315	COVER ACCESS	1
7	PAOZZ	96906	MS3533E-47	WASHER, LOCK	10
8	PAOZZ	96906	MS35690-724	NUT, PLAIN, HEXAGON	10
9	PAOZZ	19207	7405553	RING, WIPER	2
10	PAOZZ	19207	7975349	SEAL, PLAIN ENCASED	2
11	PAOZZ	08162	BT3994	CONE AND ROLLERS, TA.....	2
12	PAOZZ	19207	8710723	HUB, TRAILER WHEEL UOC:152	1
12	XAOZZ	19207	8343586	HUB. UOC:842	1
12	PAOZZ	19207	7979324	HUB, BODY UOC:843	1
12	PAOZZ	19207	871036	HUB, WHEEL UOC:844	1
13	PAOZZ	19207	7954291	WASHER, KEY UOC:842,844	1
14	PAOZZ	19207	7001725	NUT, PLAIN HEXAGON UOC:152	2
14	PAOZZ	19207	7521633	NUT, PLAIN OCTAGON UOC:842	4
14	PAOZZ	78500	12275305	NUT, PLAIN, OCTAGON HUB BEARING INNER UOC:842,844	2
15	PAOZZ	19207	7521650	WASHER, KEY UOC:842,844	2
15	XBOZZ	19207	7007089	WASHER KEY	1

Current part is item (10) on diagram. Available at www.oshkoshequipment.com